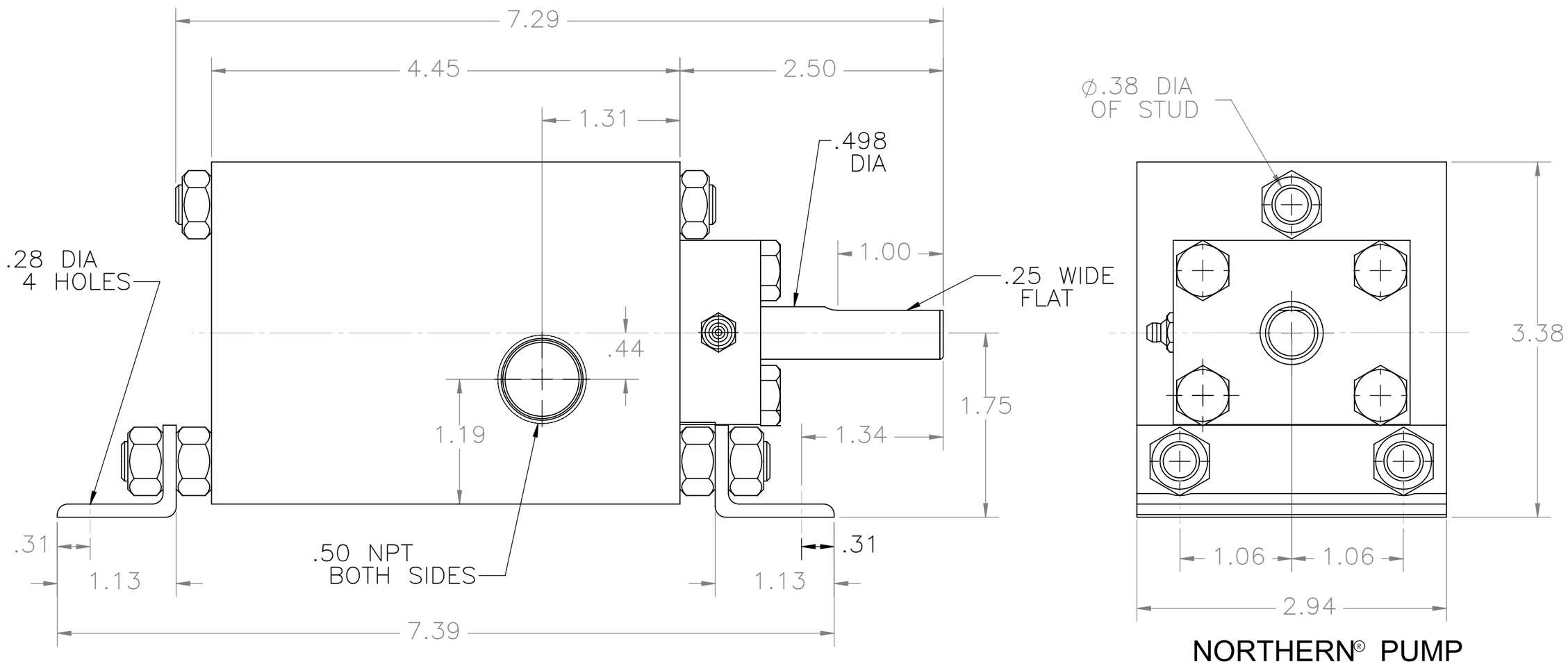

NORTHERN® PUMP

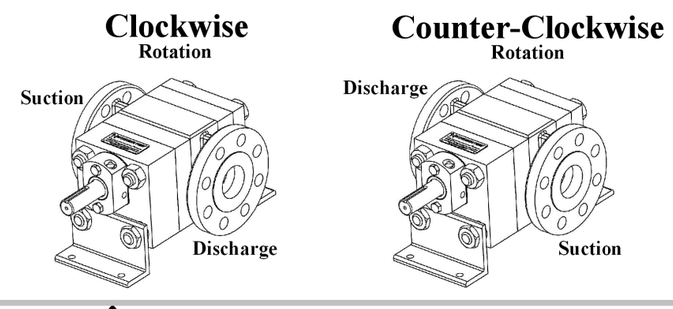

McNALLY
McNALLY INDUSTRIES, LLC.
340 WEST BENSON AVE., GRANTSBURG, WI 54840 (715)463-8300

PUMP ASSEMBLY

4300–06

SCALE: 1:1	ESTIMATED WEIGHT:	SHEET 1 OF 1